Assembling Instruction

ITEM# ST-S240

Attention:Do not tighten the screws until all of them are in right positions

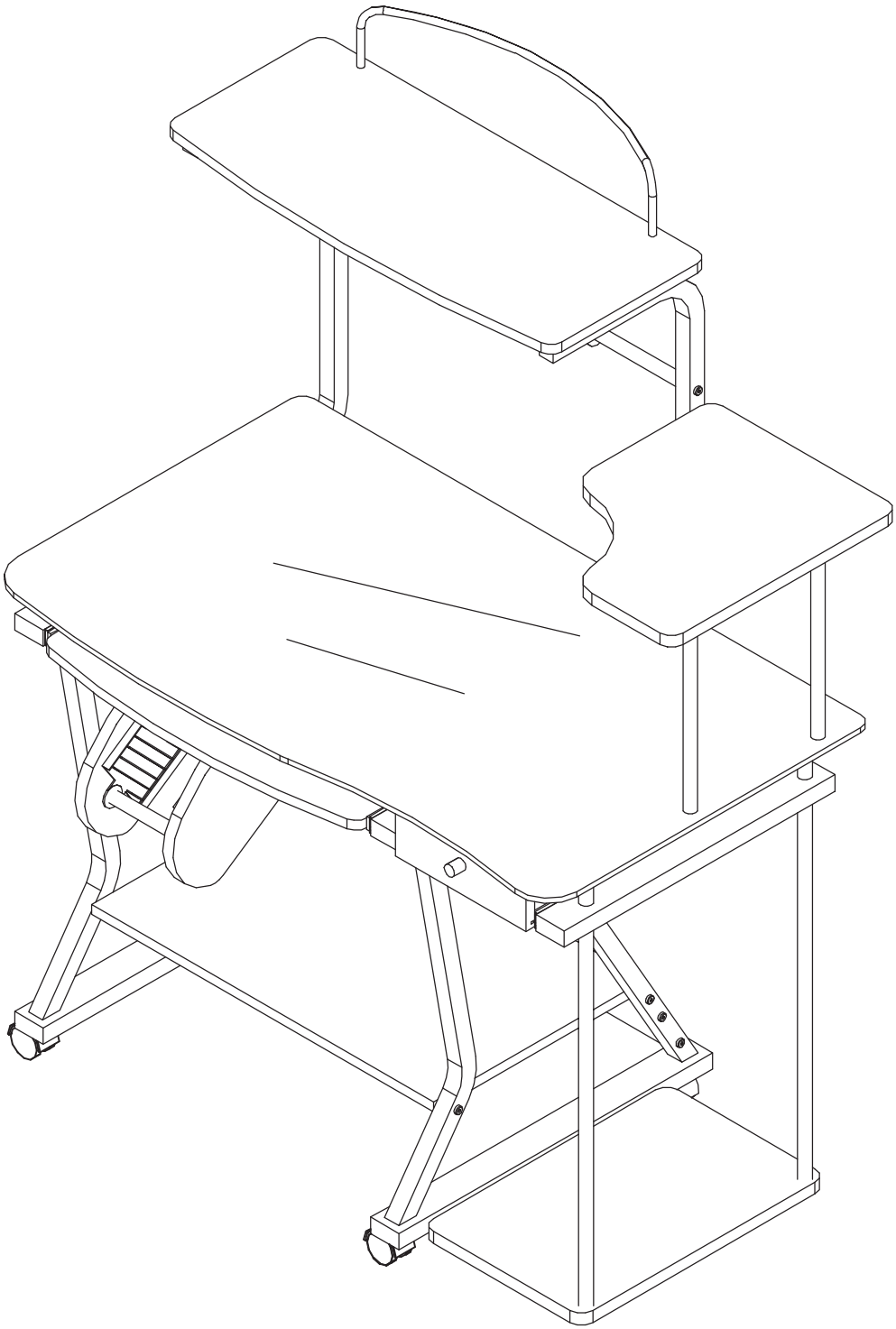

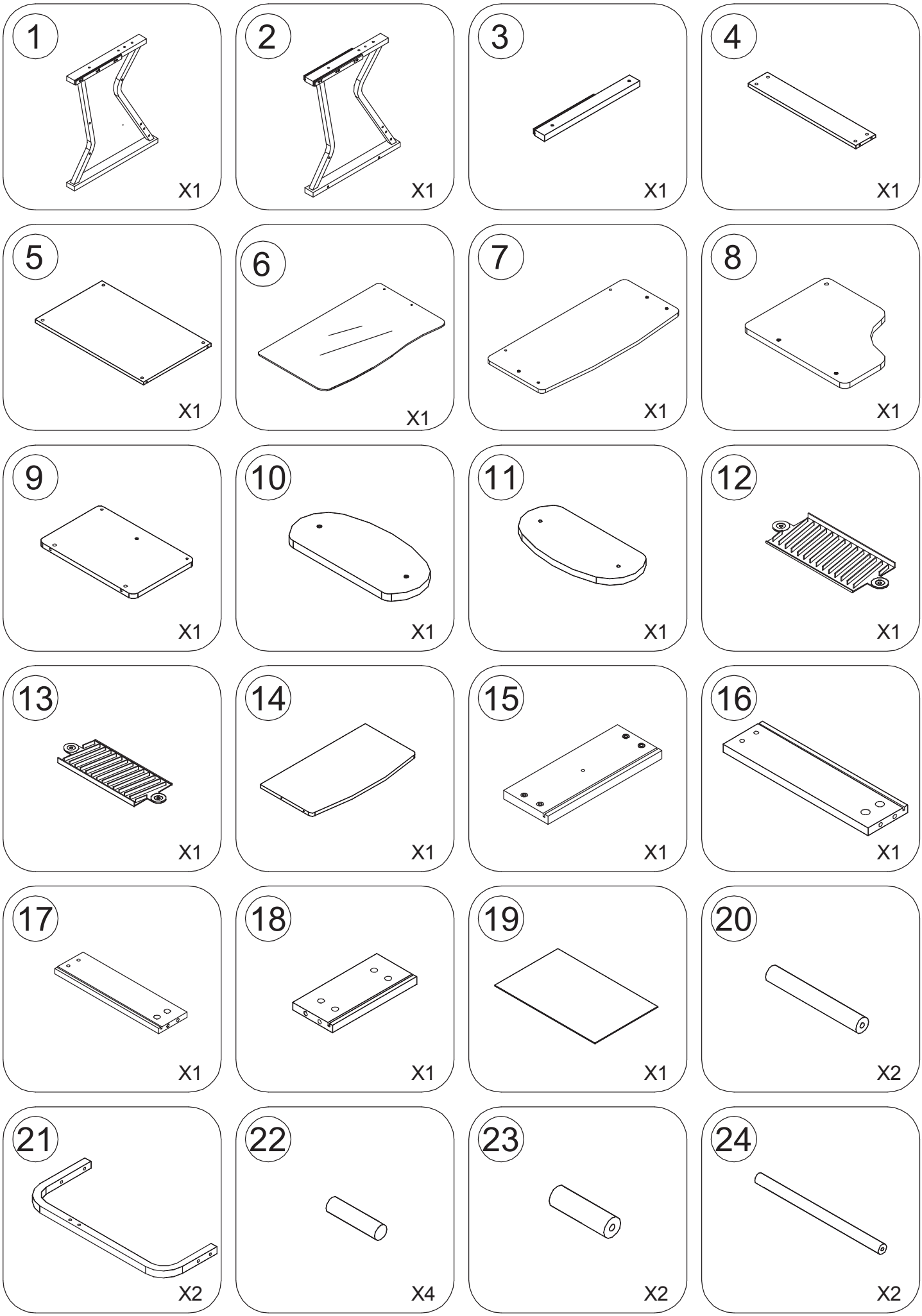
1
X1
2
X1
3
X1
4
X1
5
X1
6
X1
7
X1
8
X1
9
X1
10
X1
11
X1
12
X1
13
X1
14
X1
15
X1
16
X1
17
X1
18
X1
19
X1
20
X2
21
X2
22
X4
23
X2
24
X2

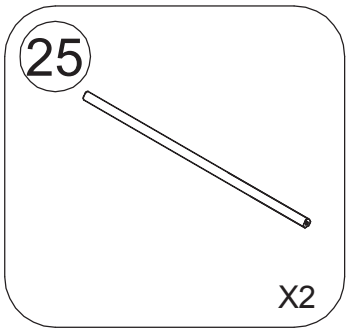
25
X2

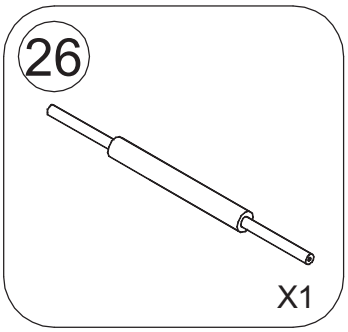
26
X1

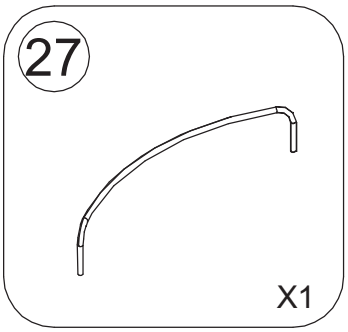
27
X1

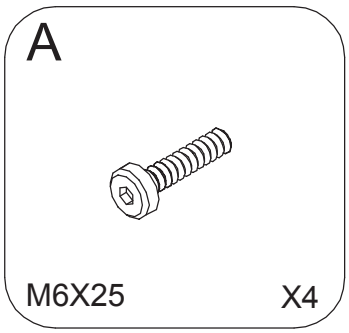
A
M6X25
X4

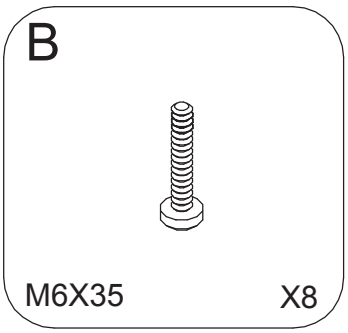
B
M6X35
X8

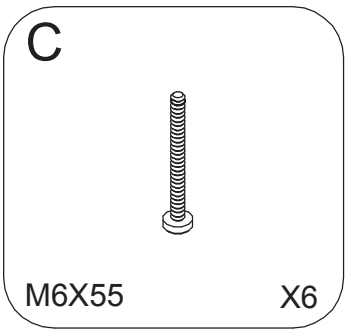
C
M6X55
X6

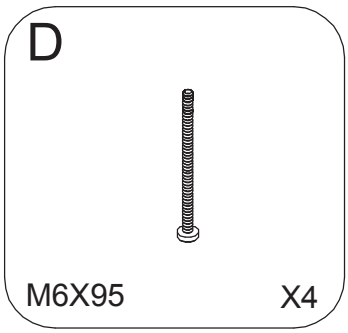
D
M6X95
X4

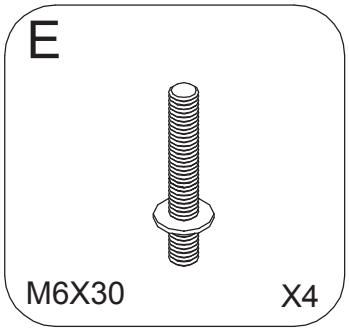
E
M6X30
X4

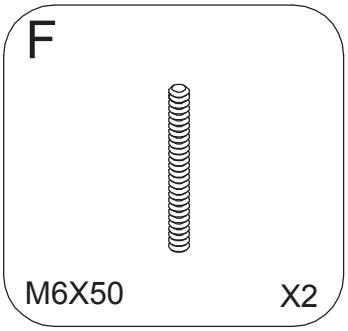
F
M6X50
X2

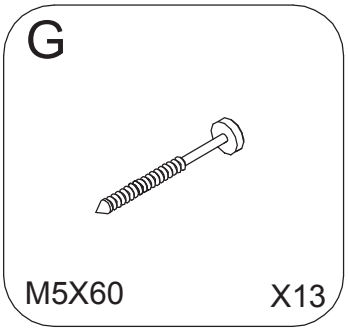
G
M5X60
X13

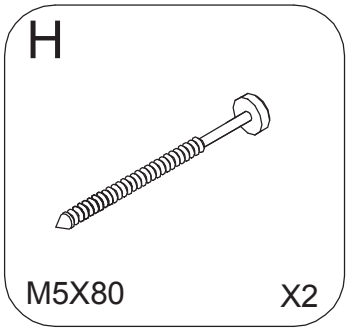
H
M5X80
X2

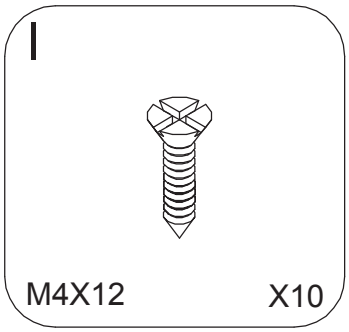
I
M4X12
X10

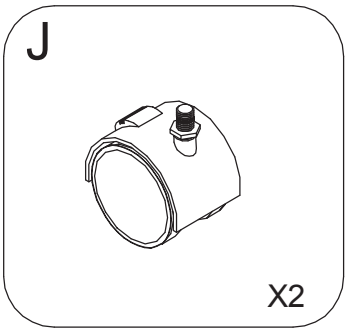
J
X2

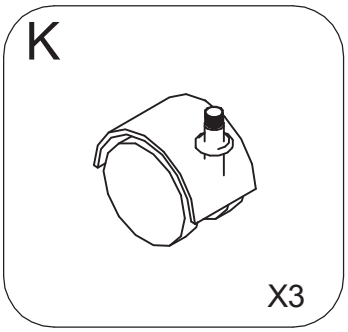
K
X3

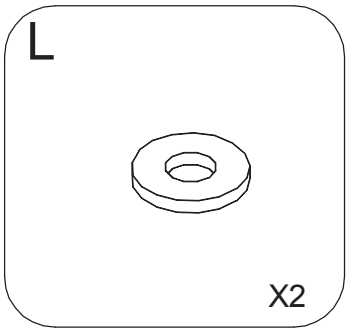
L
X2

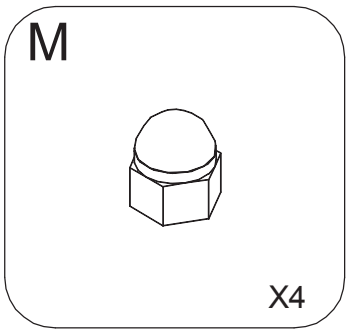
M
X4

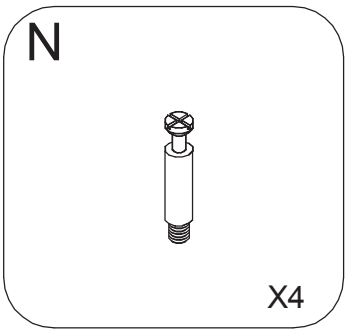
N
X4

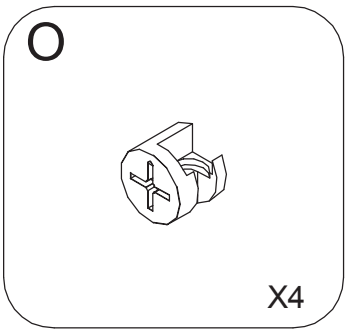
O
X4

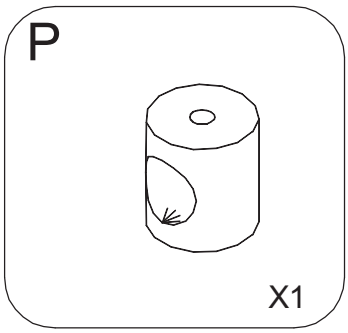
P
X1

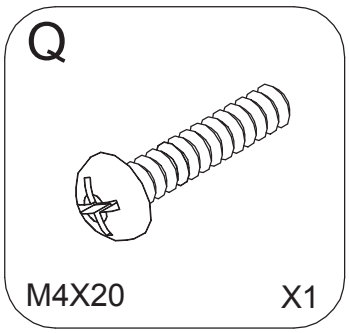
Q
M4X20
X1

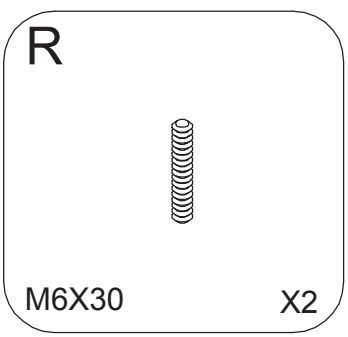
R
M6X30
X2

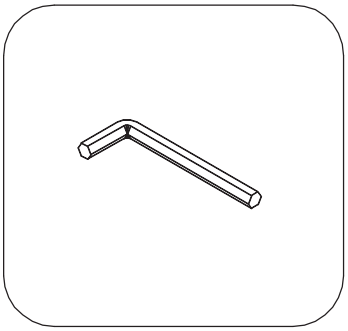

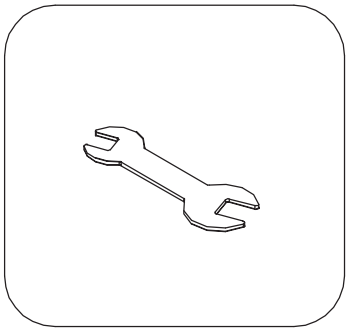

1

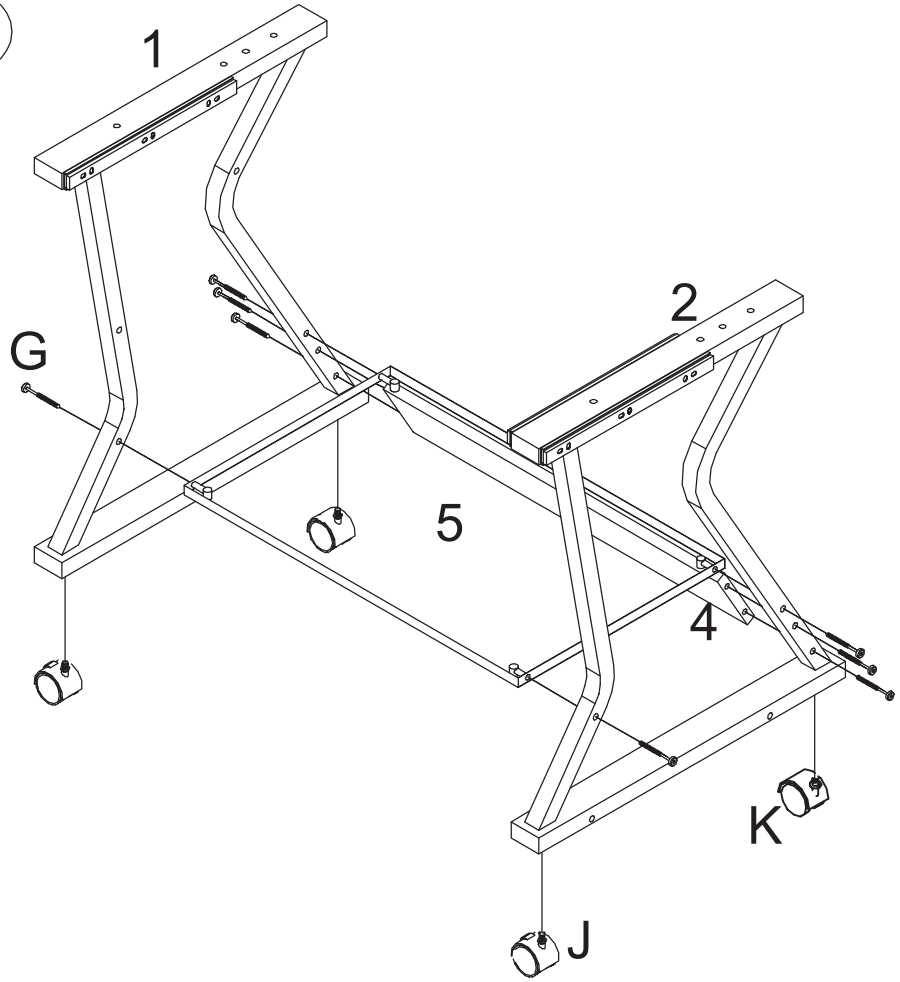

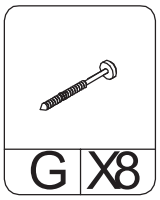

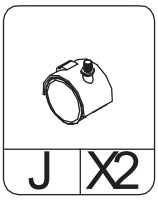

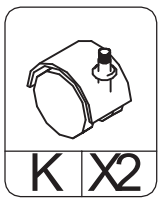

2

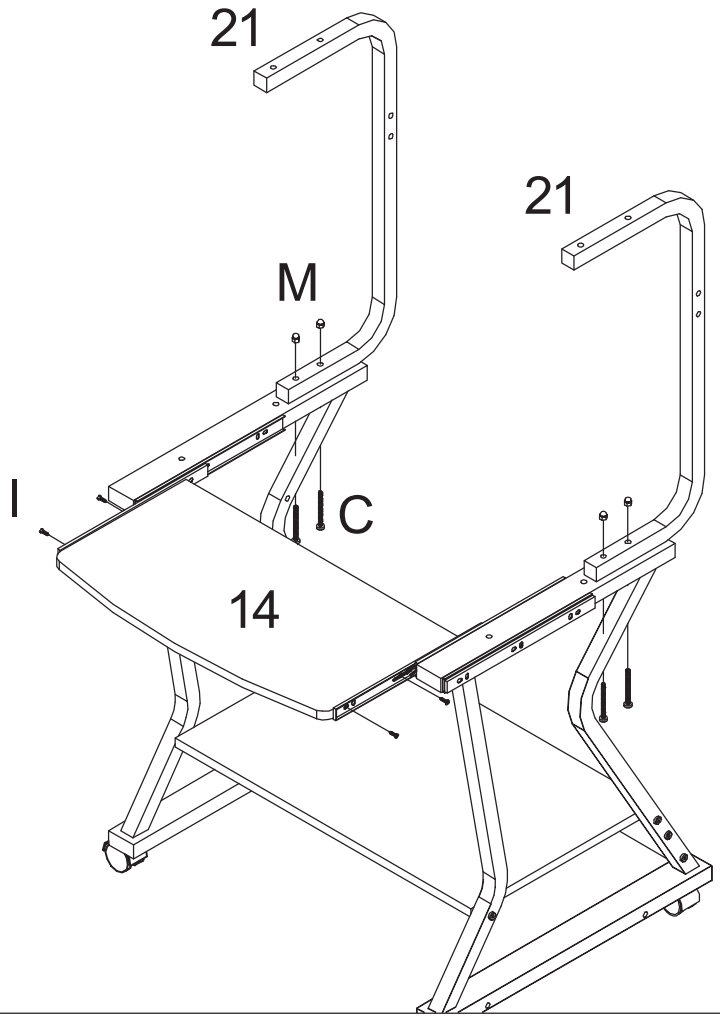

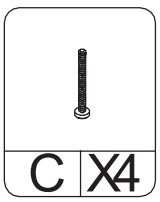

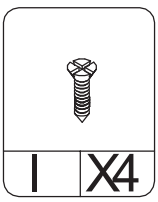

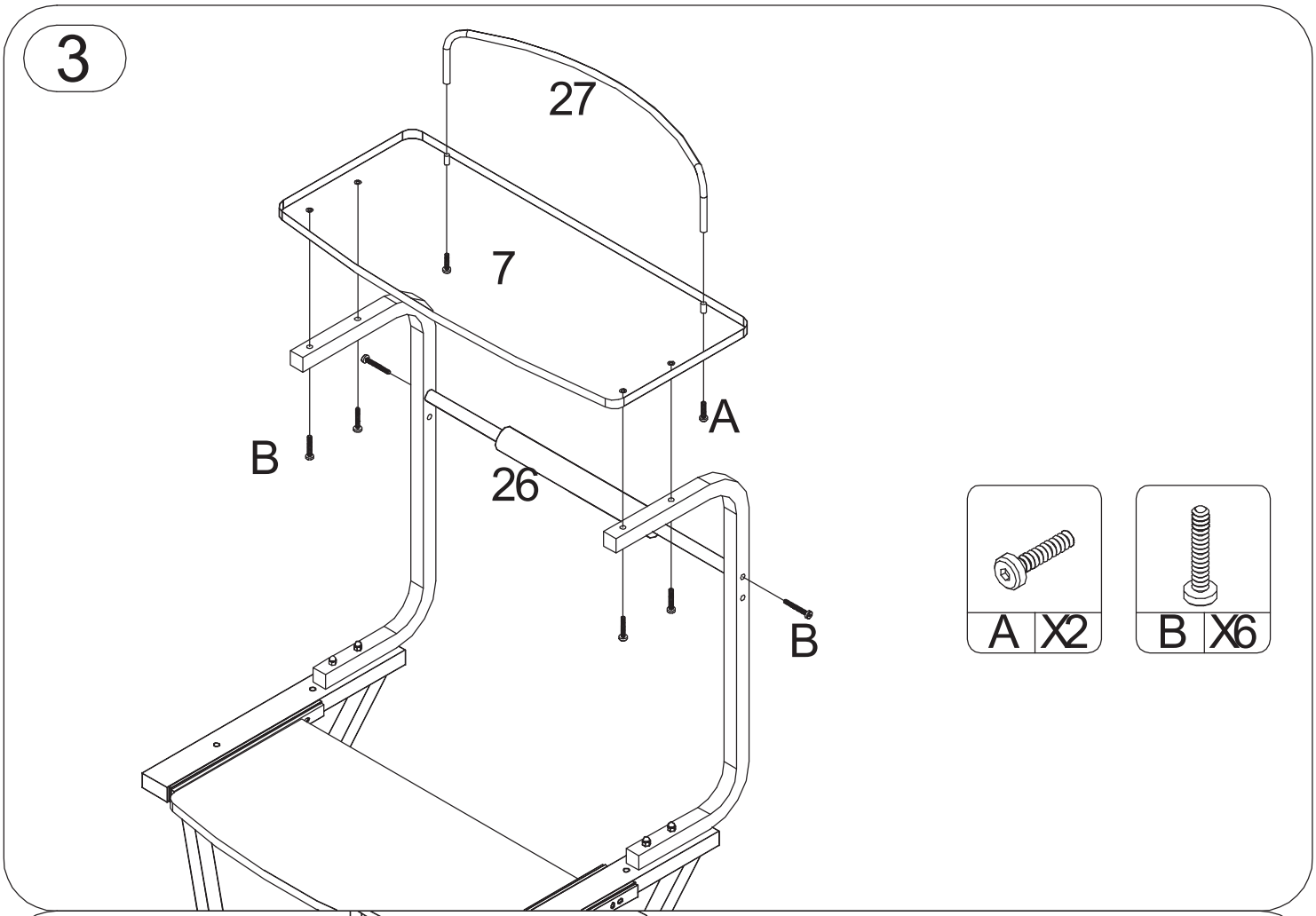
3
27
7
A
B
26
B
A X2
B X6

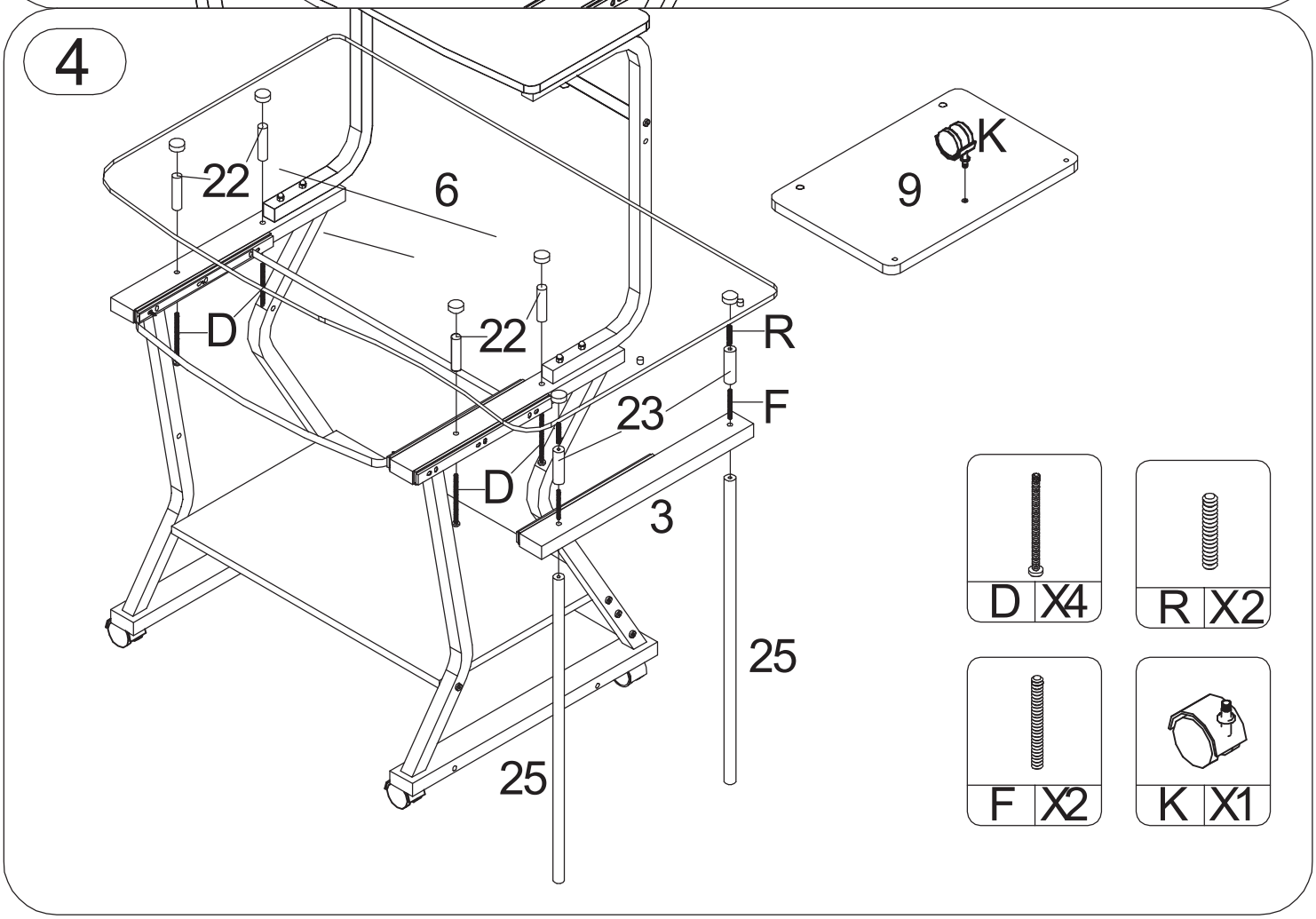
4
22
6
K
9
D
22
R
23
F
D
3
25
25
D X4
R X2
F X2
K X1

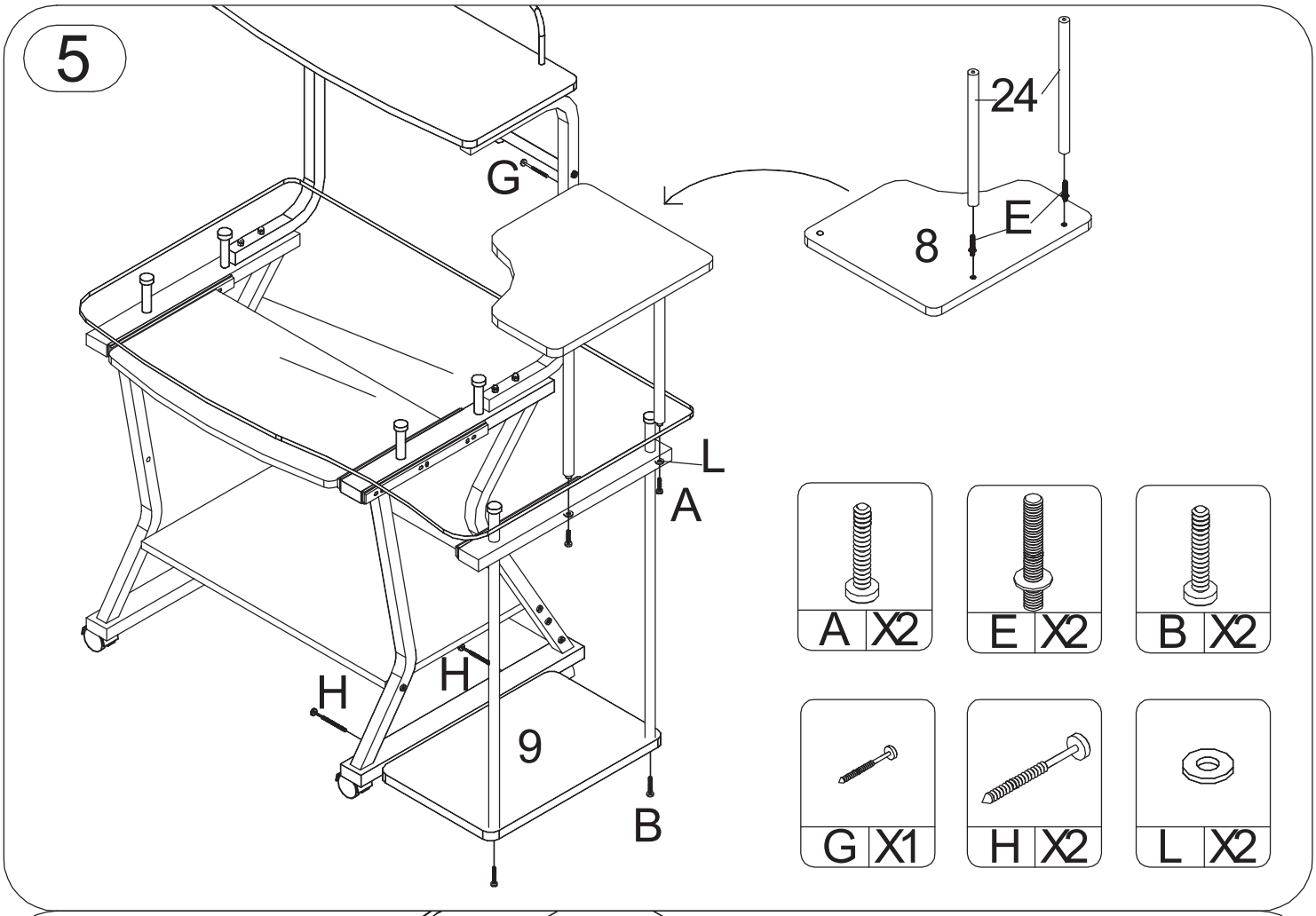
5
24
G
E
8
L
A
H
H
9
B
A X2
E X2
B X2
G X1
H X2
L X2

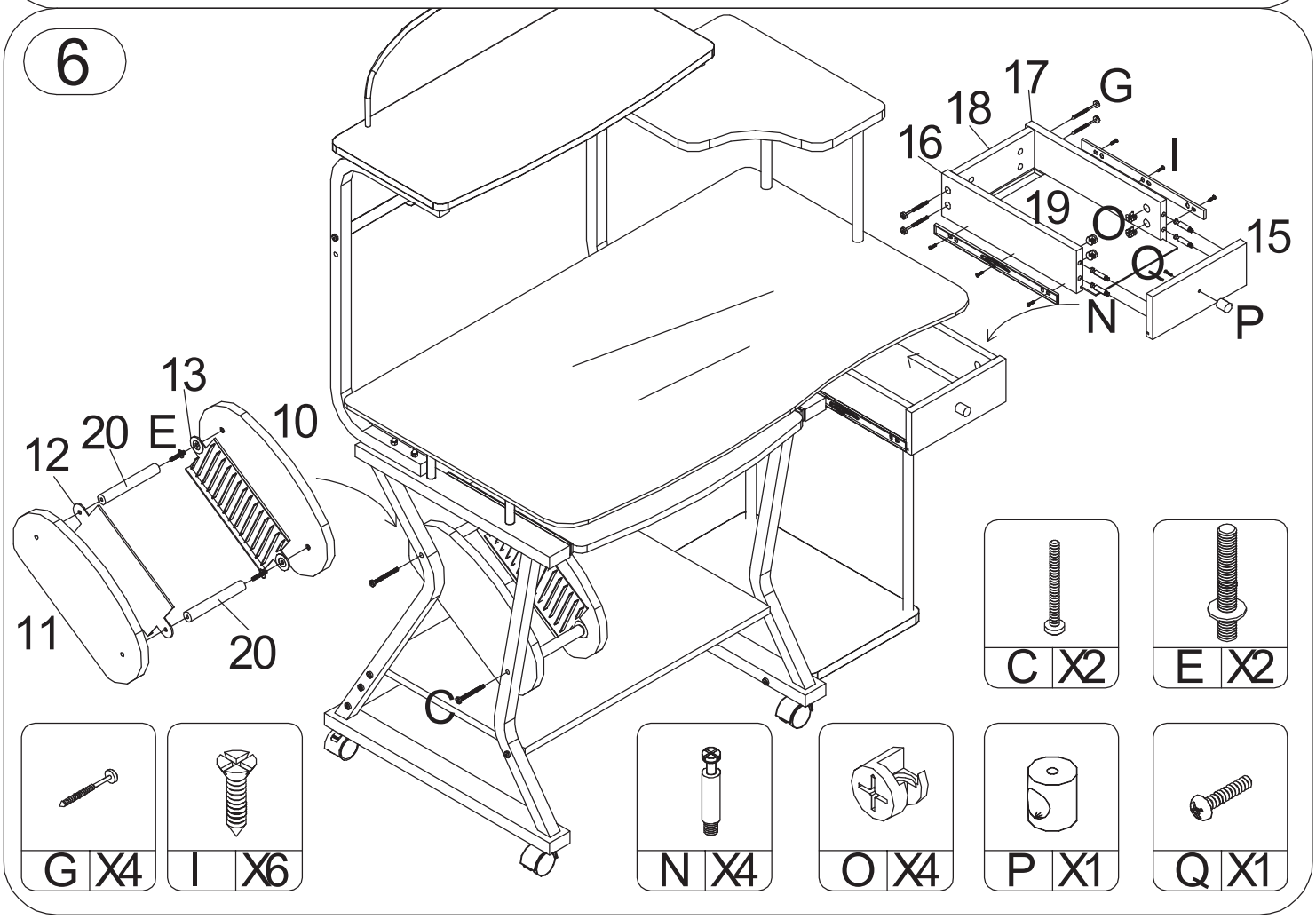
6
17
G
18
16
I
19
O
15
Q
N
P
13
10
12
20
E
11
20
C
C X2
E X2
G X4
I X6
N X4
O X4
P X1
Q X1